MSE 440/540: Processing of Metallic Materials

Instructors: Yuntian Zhu
Office: 308 RBII
Ph: 513-0559

ytzhu@ncsu.edu

Lecture 10: Rolling and Extrusion

Rolling

Rotating rolls perform two main functions:

- Pull the work into the gap between them by friction between workpart and rolls
- Simultaneously squeeze the work to reduce its cross section

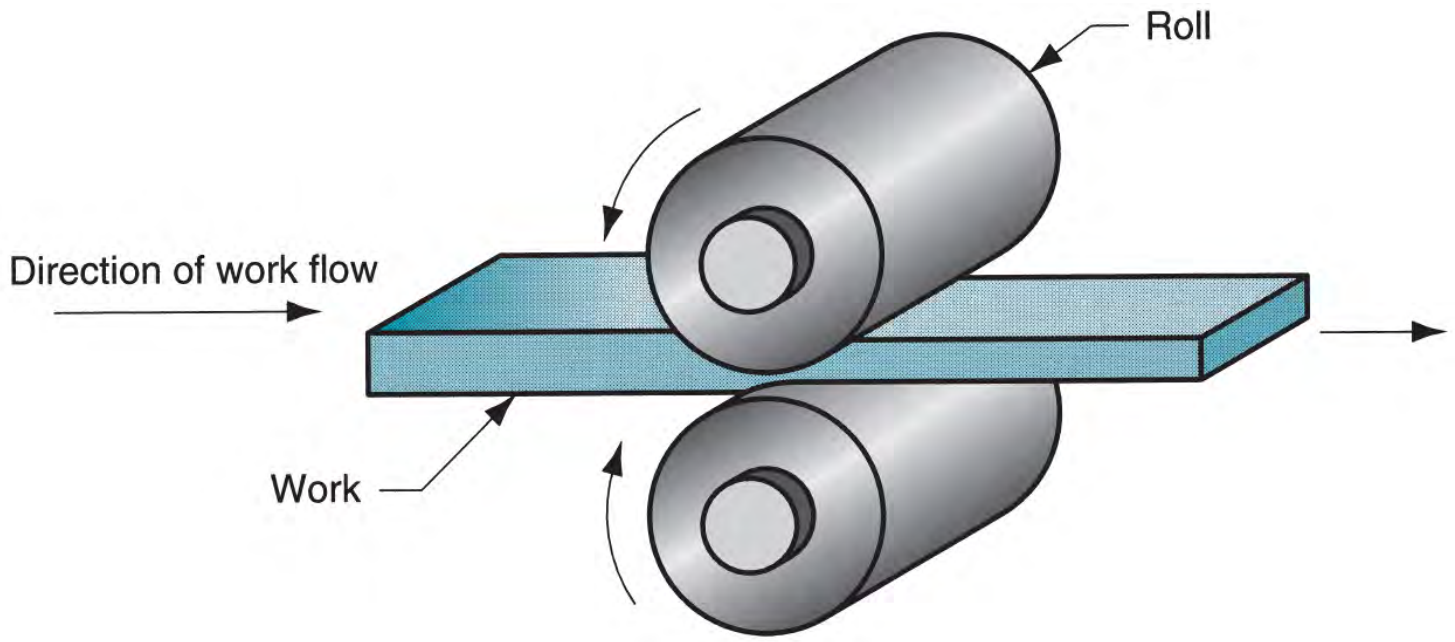

Types of Rolling

- Based on workpiece geometry
  - Flat rolling - used to reduce thickness of a rectangular cross section
  - Shape rolling - square cross section is formed into a shape such as an I-beam
- Based on work temperature
  - Hot Rolling – can achieve significant deformation
  - Cold rolling – produces sheet and plate stock

Rolled Products Made of Steel

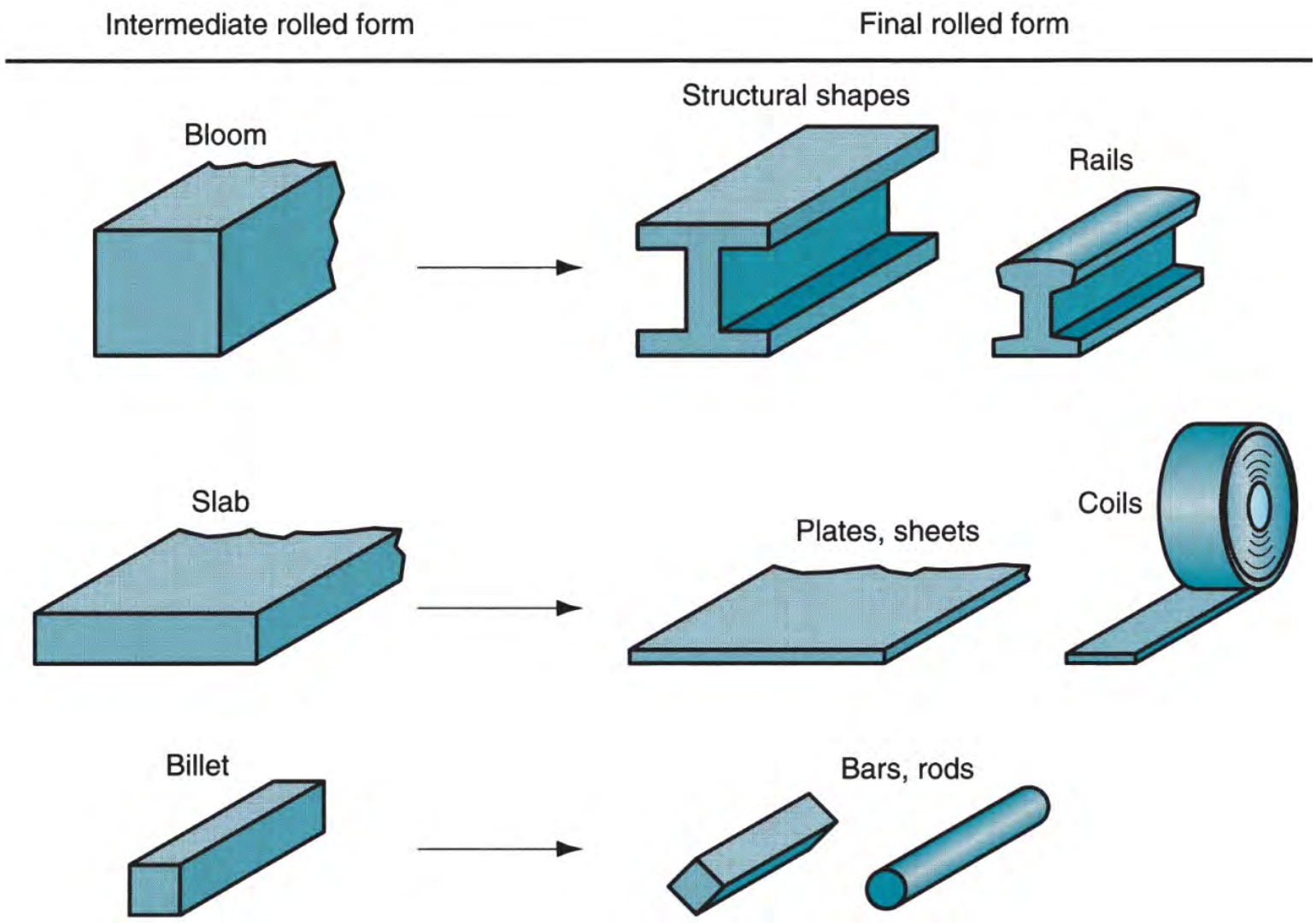

Diagram of Flat Rolling

- Side view of flat rolling, indicating before and after thicknesses, work velocities, angle of contact with rolls, and other features.

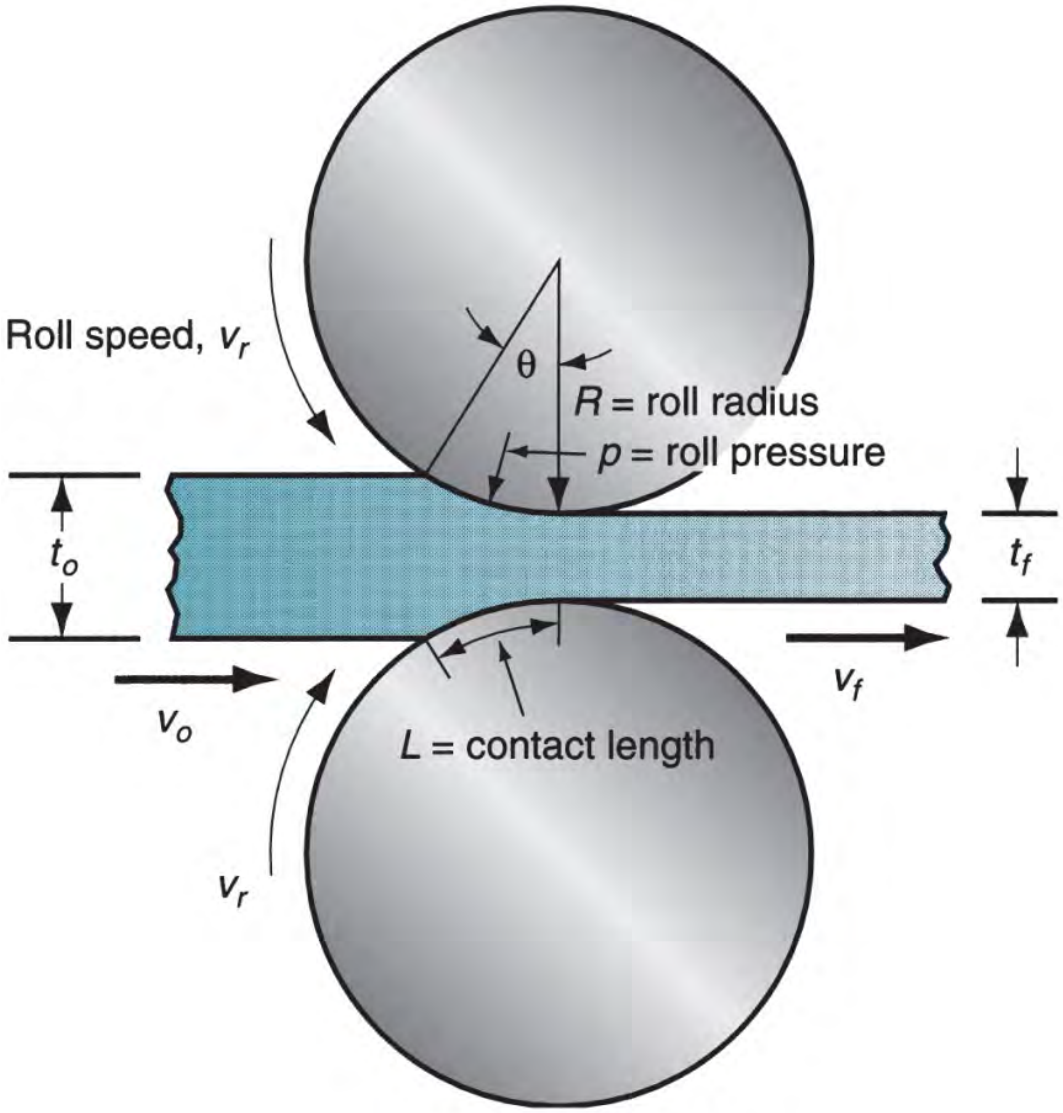

True rolling strain:

$$\varepsilon = \ln \frac{t_0}{t_f}$$

$$F = \bar{\sigma} w L,$$

$$L = \sqrt{R(t_0 - t_f)}$$

$$T = 0.5FL$$

$$P = 2\pi NFL$$

Flat Rolling Terminology

- *Draft* = amount of thickness reduction

$$d = t_o - t_f$$

- *Reduction* = draft expressed as a fraction of starting stock thickness:

$$r = \frac{d}{t_o}$$

Where t_o = starting thickness; t_f = final thickness

Shape Rolling

- Work is deformed into a contoured cross section rather than flat (rectangular)
  - Accomplished by passing work through rolls that have the reverse of desired shape
- Products
  - Construction shapes such as I-beams, L-beams, and U-channels
  - Rails for railroad tracks
  - Round and square bars and rods

Rolling Mill Configurations

- (a) Two-high, (b) three-high, (c) four-high

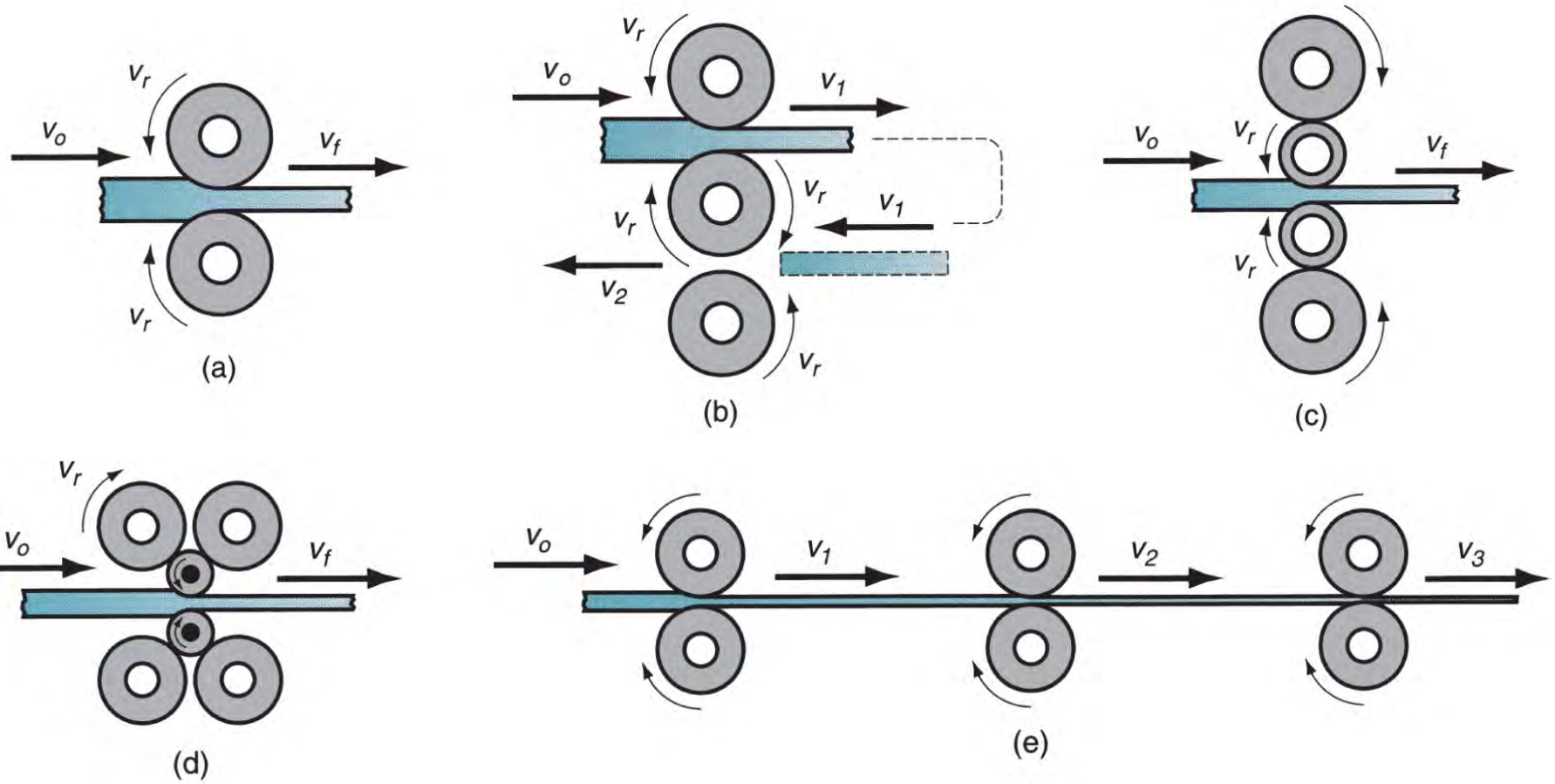

- (d) Cluster mill, (e) tandem rolling mill

Rolling Mill Configurations

- (d) Cluster mill, (e) tandem rolling mill

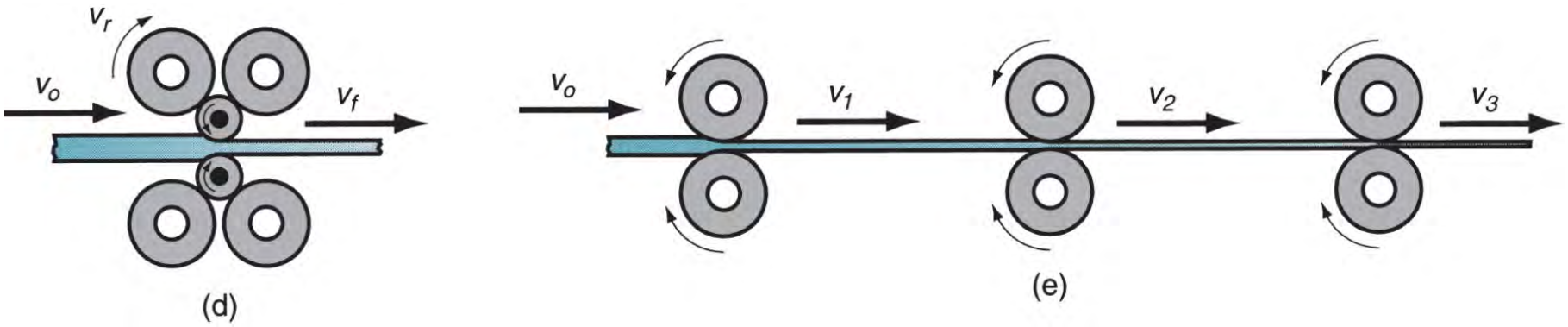

Thread Rolling

- (1) Start of cycle, and (2) end of cycle

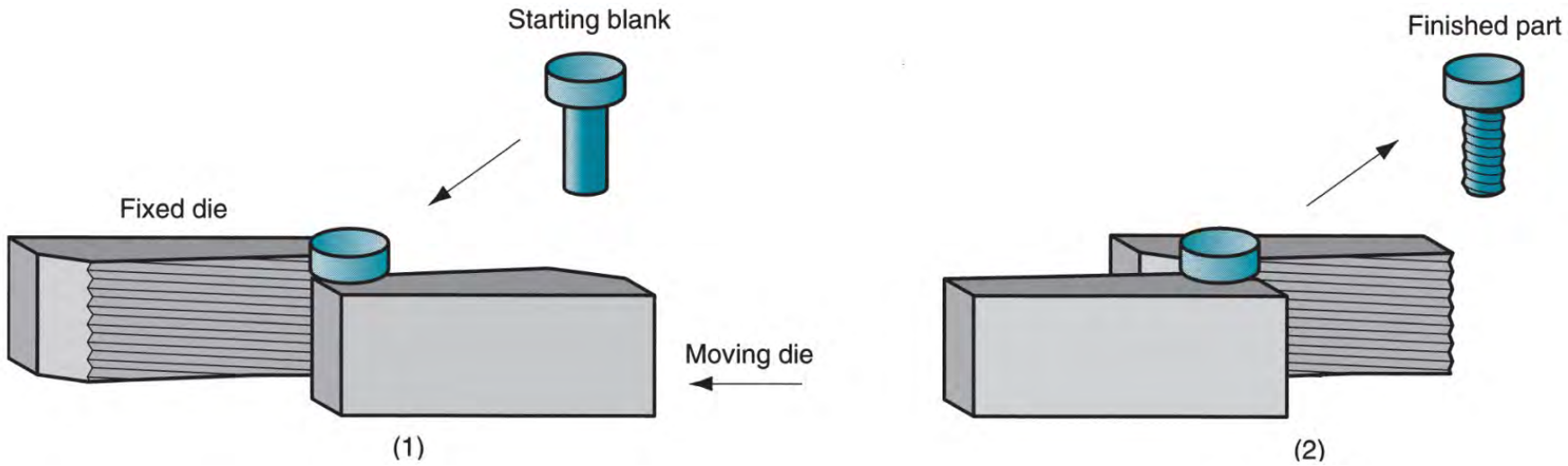

http://www.youtube.com/watch?v=iH8ujNE9ZIo

Ring Rolling

- As thick-walled ring is compressed, deformed metal elongates, causing diameter of ring to enlarge
- Hot working process for large rings and cold working process for smaller rings
- Products: ball and roller bearing races, steel tires for railroad wheels, and rings for pipes, pressure vessels, and rotating machinery

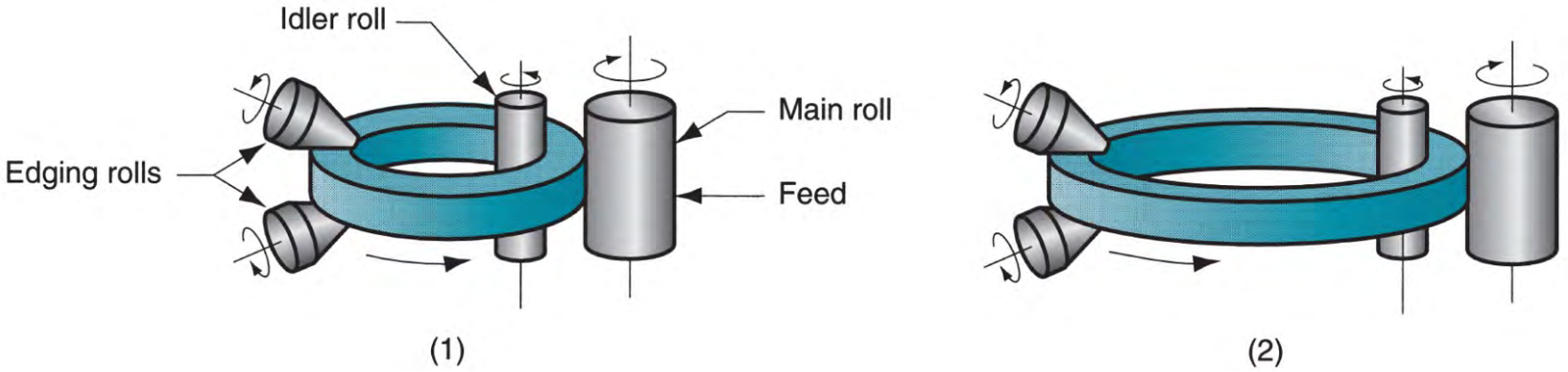

http://www.youtube.com/watch?v=GDyWyDP3cvs

Extrusion

Compression forming process in which work metal is forced to flow through a die opening to produce a desired cross-sectional shape

- Process is similar to squeezing toothpaste out of a toothpaste tube
- In general, extrusion is used to produce long parts of uniform cross sections
- Two basic types:
  - Direct extrusion
  - Indirect extrusion

Direct Extrusion

- Also called *forward extrusion*
- As ram approaches die opening, a small portion of billet remains that cannot be forced through the die
  - This portion, called the *butt*, must be separated from the *extrudate* by cutting it off just beyond the die exit

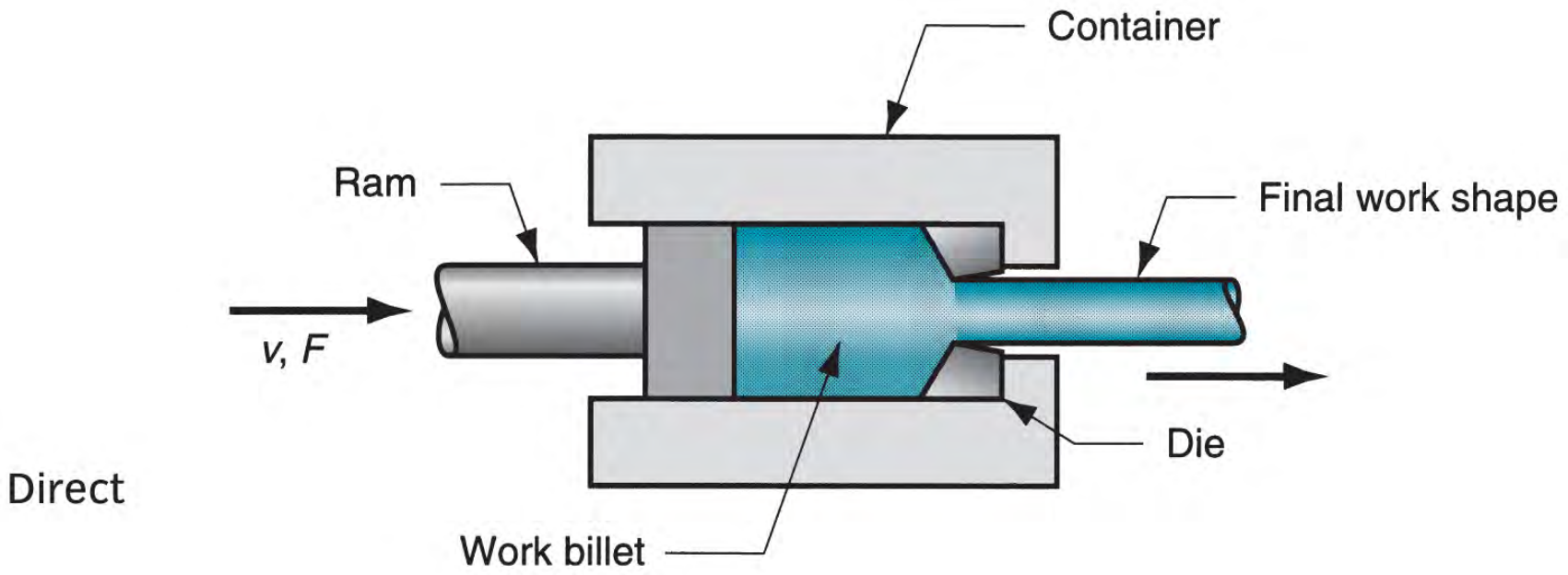

Direct

http://www.youtube.com/watch?v=iiGlq7408ME

Hollow and Semi-Hollow Shapes

- (a) Direct extrusion to produce hollow or semi-hollow cross sections; (b) hollow and (c) semi-hollow cross sections

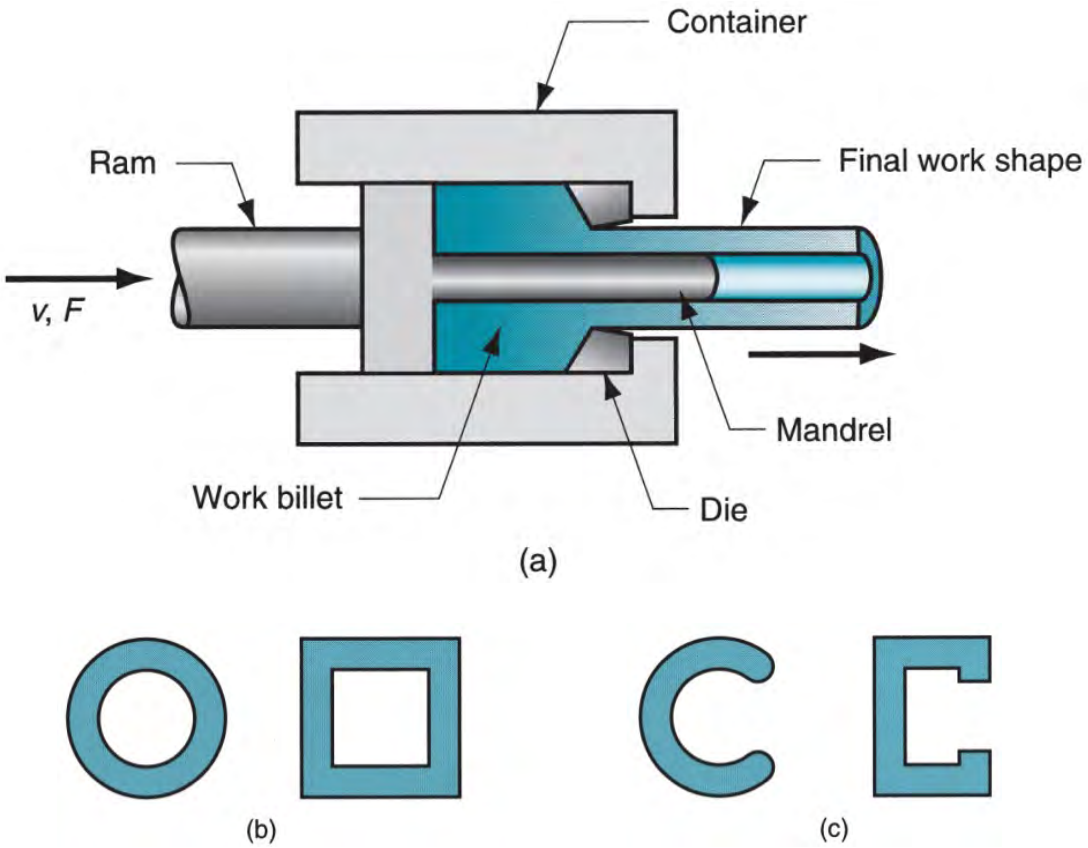

Indirect Extrusion

- Indirect extrusion to produce (a) a solid cross section and (b) a hollow cross section

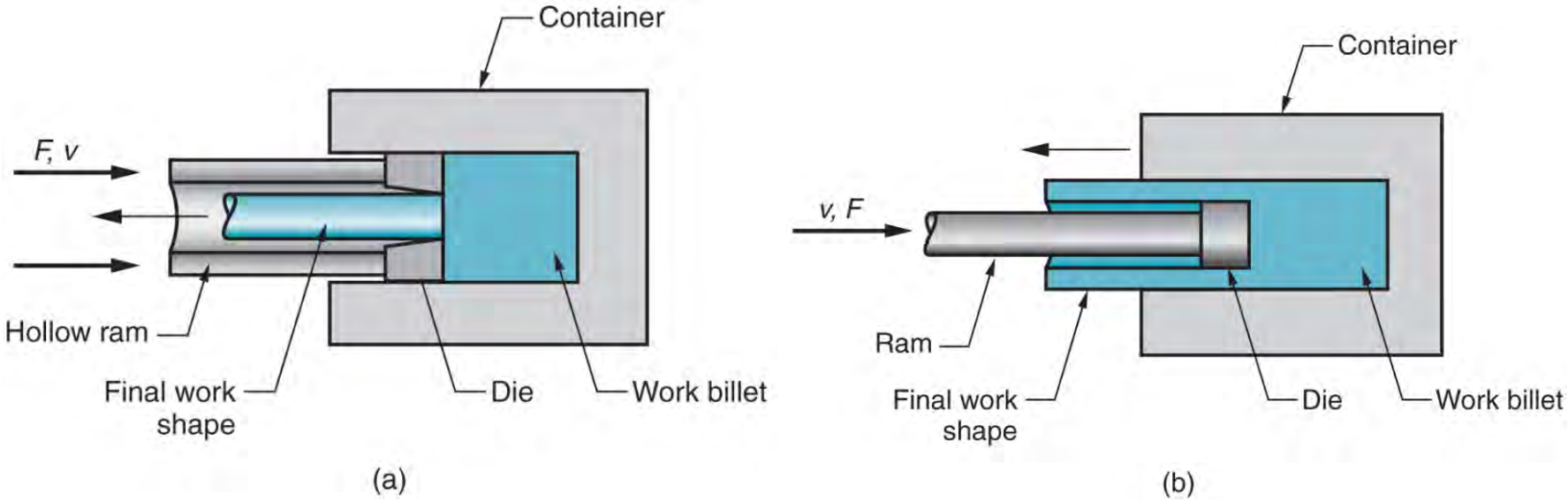

Comments on Indirect Extrusion

- Also called *backward extrusion* and *reverse extrusion*
- Limitations of indirect extrusion are imposed by
  - Lower rigidity of hollow ram
  - Difficulty in supporting extruded product as it exits die

Advantages of Extrusion

- Variety of shapes possible, especially in hot extrusion
  - Limitation: part cross section must be uniform throughout length
- Grain structure and strength enhanced in cold and warm extrusion
- Close tolerances possible, especially in cold extrusion
- In some operations, little or no waste of material

Hot vs. Cold Extrusion

- Hot extrusion - prior heating of billet to above its recrystallization temperature
  - Reduces strength and increases ductility of the metal, permitting more size reductions and more complex shapes
- Cold extrusion - generally used to produce discrete parts
  - The term impact extrusion is used to indicate high speed cold extrusion

Extrusion Ratio

Also called the *reduction ratio*, it is defined as

$$r_x = \frac{A_o}{A_f}$$

True strain:

$$\varepsilon = \ln r_x = \ln \frac{A_0}{A_f}$$

Extrusion Die Features

- Low die angle - surface area is large, which increases friction at die-billet interface
  - Higher friction results in larger ram force
- Large die angle - more turbulence in metal flow during reduction
  - Turbulence increases ram force required
- Optimum angle depends on work material, billet temperature, and lubrication

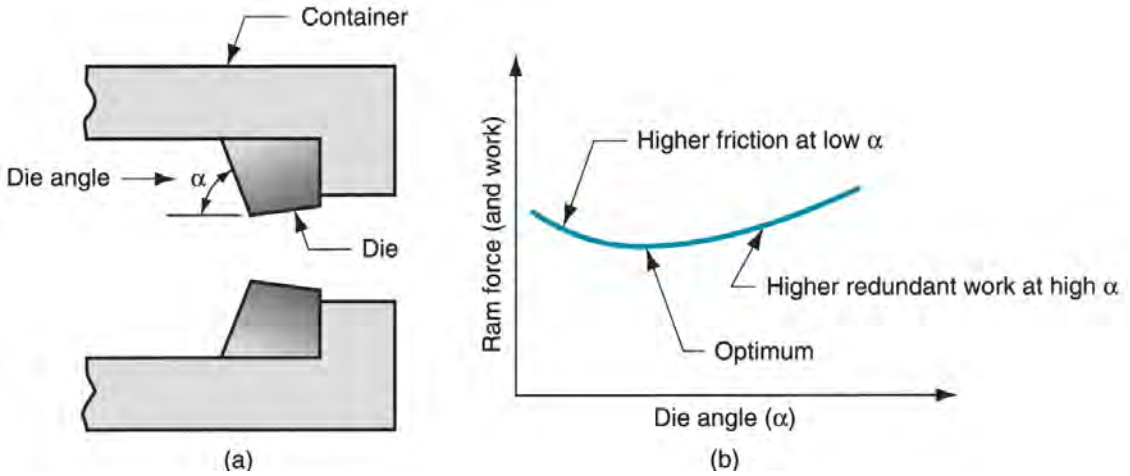

Complex Cross Section

- Extruded cross section for a heat sink (courtesy of Aluminum Company of America)

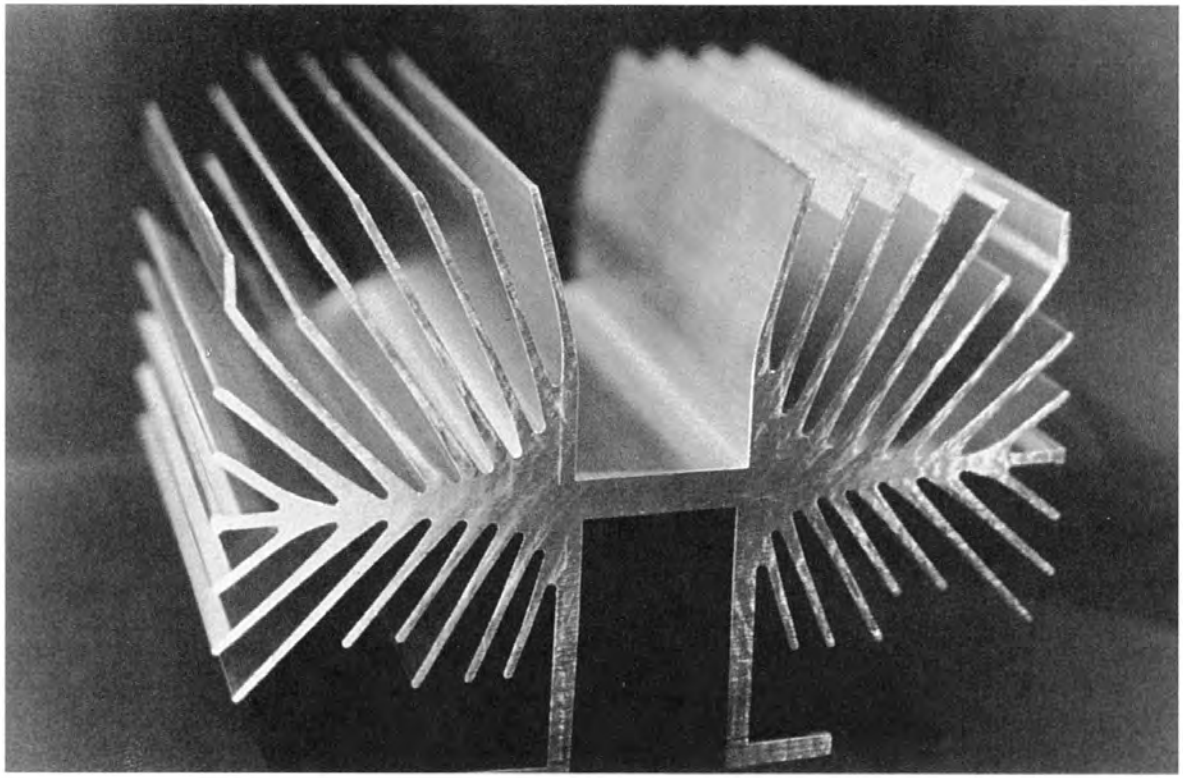

HW assignment

- Reading assignment: Chapters 13

- Review Questions: 13.2, 13.5, 13.8, 13.16, 13.17,
- Problems: 13.1, 13.3, 13.5, 13.8, 13.18, 13.20,